

Technical Data - Electrical Ratings

Voltage Supply	12-24 VAC-VDC / 110-220 VAC
Signal Type	Multi (Continuous/Flashing/Strobe/Rotate)
Light Colors	Red, Green
Power Consumption	4W
Connection	Cable
Dimensions	130x130x58 (Lamp)
Weight Approx	1.1 kg
Protection	IP65
Body Material	ABS
Mounting	Base Mount
Luminous Source	LED
Lens Material	Polycarbonate
Temperature Range	-20°C to +50° C

Technical Drawings

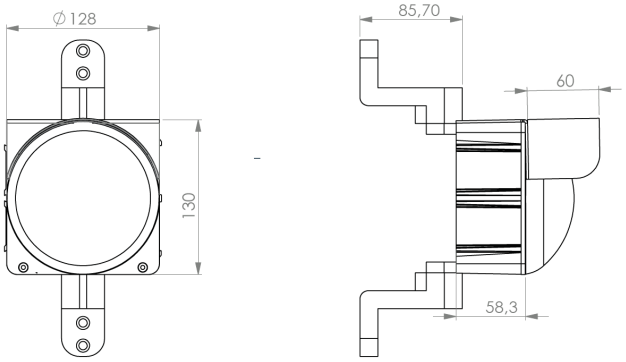

Connections

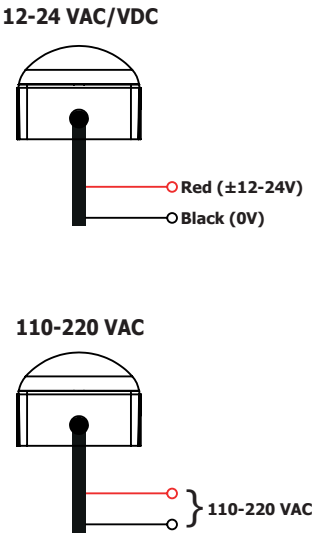

Code Key

İL-XTRL-KD-X222KY

Traffic Light Series

Mounting Type

KD: Adjustable angle mount

Number of Colors

X2: 2 colors
X3: 3 colors

Colors

K : Red
Y : Green
S : Yellow
M : Blue
B : White
T : Amber

Supply Voltage

22 : 110-220V AC/DC
24 : 12-24V AC/DC